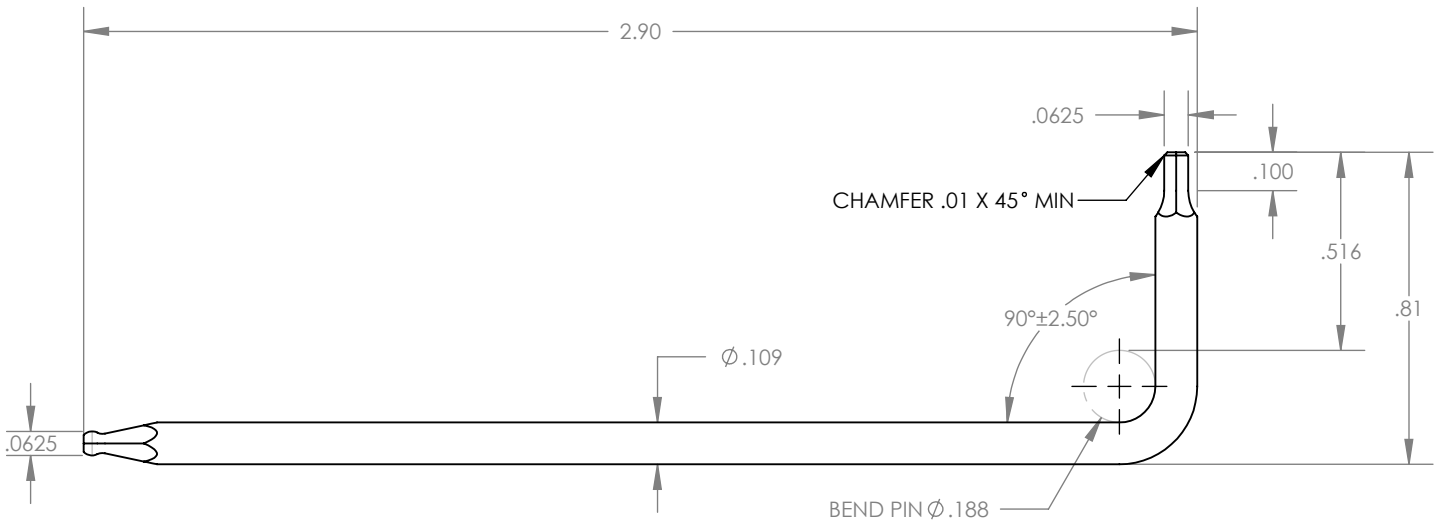

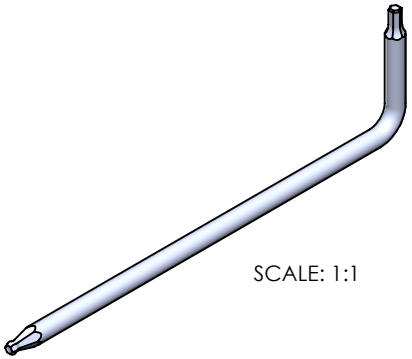

SCALE: 1:1

UNLESS OTHERWISE SPECIFIED: DIMENSIONS ARE IN INCHES				TOLERANCES: X.XX= ±0.13 X.XXX= ±0.015 X.XXXX= -0.0010	STERITOOL™ The Global Source for Stainless Steel Tools	
	NAME	SIGN	DATE			
DRAWN	A.T.		06.25.19			
APPV'D						
MATERIAL: 718 INCONEL NON-MAGNETIC S.S.					TITLE: 1/16" NM BALL 'L' HEX KEY	
THIS DRAWING IS THE PROPERTY OF STERITOOL, INC. ANY REPRODUCTIONS OR MODIFICATIONS OF THIS DRAWING OR ITS CONTENTS WITHOUT THE CONSENT OF STERITOOL, INC. IS PROHIBITED.					PART NO. 41850	REV: B
					SCALE: 2:1	SHEET 1 OF 1